AA3D

WP 3.3 Drone logistics

Interreg Pohjoinen
Euroopan aluekehitysrahasto

EUROOPAN UNIONI

REGION NORRBOTTEN

LAPIN LIITTO

Arctic Airborne 3D (AA3D)

- In project work package 3.3, idea was to study commercial drone suitability for drone logistics and possibly develop new delivery drones for short and medium range distances.

- Drone design was guided by two main cases:

User Case 1 (short range)

- mobile accommodation manufacturer

User Case 2 (medium range)

- Tourist destination island near Kokkola

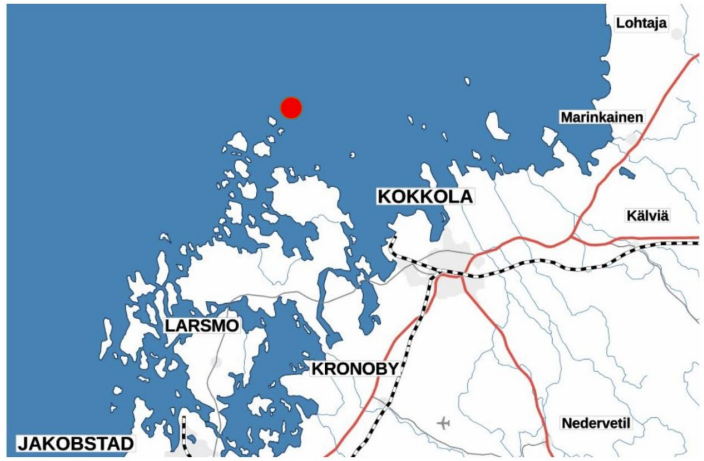

Arctic Airborne 3D (AA3D)

- Methods and technologies used for designing new drones and commercial drone accessories
  - 3D modeling and simulation (Vertex G4 and Fusion 360 software)
  - 3D printing drone parts from various FDM materials/filaments
  - CNC routing parts from plywood and aluminium
  - Laser cutting parts from plywood

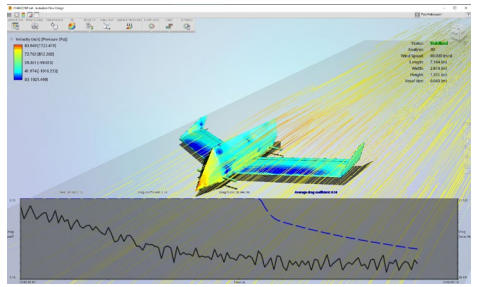

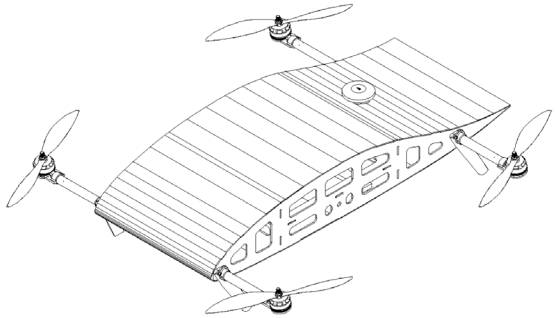

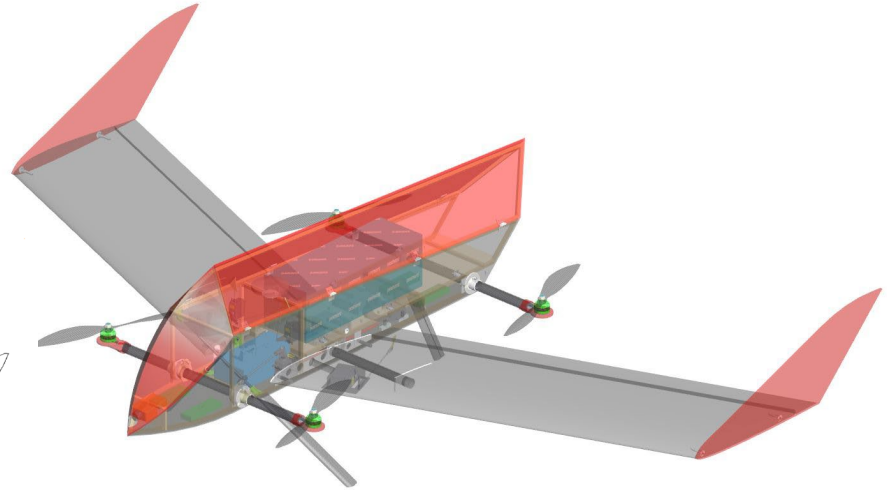

Arctic Airborne 3D (AA3D)

Drone prototypes designed and tested for different flying ranges:

VTOL tilt drone (vertical takeoff and landing)

- cargo bay inside fuselage

Lift Body drone "Pizza drone"

- enhanced quadcopter aerodynamics and range extension

Fixed wing drone

- payload drops without landing to destination

Arctic Airborne 3D (AA3D)

Other drone prototypes and ideas designed and tested:

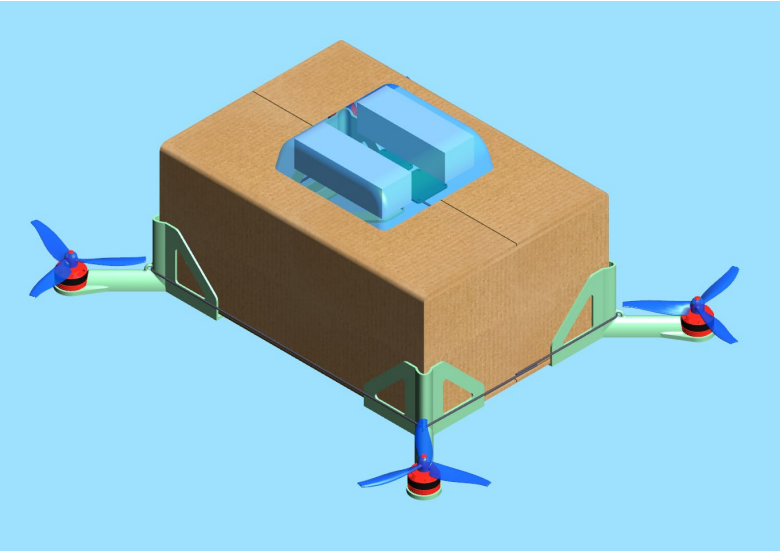

Frameless box delivery drone

Tailsitter drone

FPV quad drone used as short range delivery

Arctic Airborne 3D (AA3D)

Drone accessories designed and tested on commercial drones

3D printed cargo box for sub 100g delivery items

- Can be mounted on DJI Mavic 2 and SwellPro SplashDrone

3D printed float mounts for Mavic

Arctic Airborne 3D (AA3D)

1800W 24V Hybrid(Gasoline) drone power unit for extended flight times

- Scratch built mechanics and electronics based on Mario Schröter's instructions

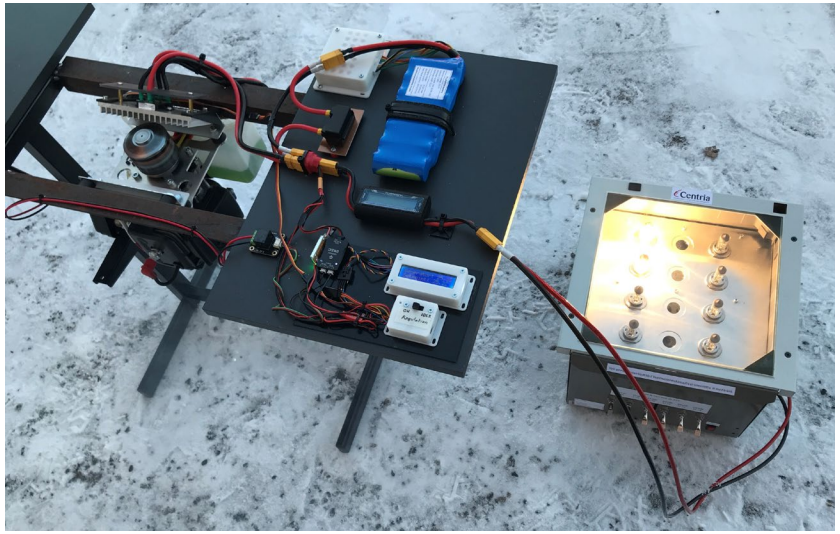

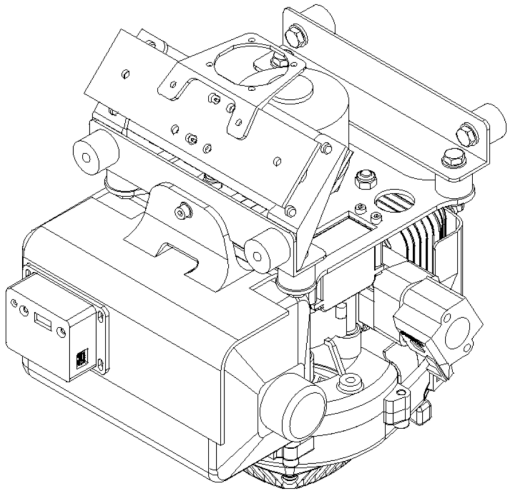

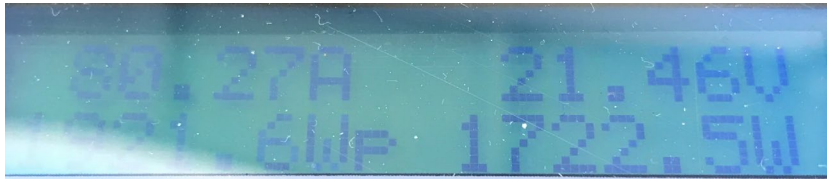

Testbed with dummy load

Arctic Airborne 3D (AA3D)

Flight controller software and firmware studied and used for drone prototypes:

- ARDUPILOT Mission planner
- PX4 QGroundControl
- Betaflight

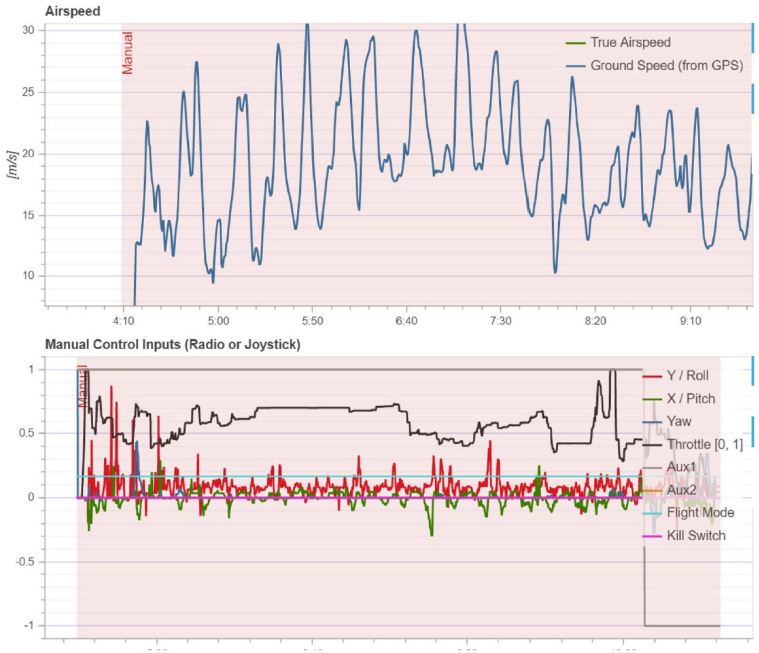

Airframe:	Generic Flying Wing Flying Wing (3000)
Hardware:	PX4_FMU_V5X (V5X02)
Software Version:	v1.12.3 (2e8918da)
OS Version:	NuttX, v8.2.0
Estimator:	EKF2
Logging Start ?:	17-03-2022 12:09
Logging Duration:	0:06:53
Vehicle Life Flight Time:	4 minutes 38 seconds
Vehicle UUID:	00020000000035323635303851070027002 0

Distance:	7.69 km
Max Altitude Difference:	79 m
Average Speed:	67.1 km/h
Max Speed:	123.6 km/h
Max Speed Horizontal:	122.9 km/h
Max Speed Up:	37.2 km/h
Max Speed Down:	41.6 km/h
Max Tilt Angle:	87.1 deg

Add a detected error...

Arctic Airborne 3D (AA3D)

Possible future developments based on these drone prototypes and study cases:

- More accurate flight controller and aerodynamic simulations for complex platforms prior test flights
- Software specially designed for short range autonomous deliveries and ecosystem
- Robust drone for hybrid power unit
- New VTOL drone concept based on these prototypes
- More drone and accessory development for tolerable winter and outdoor operations

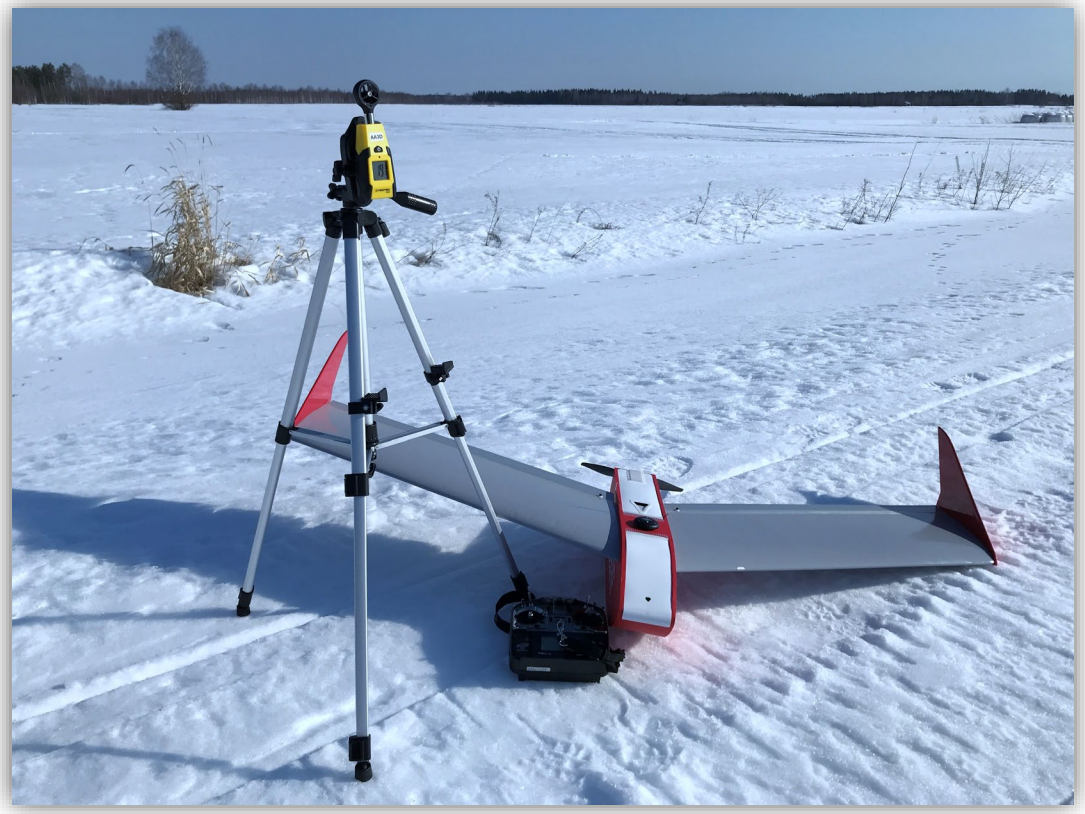

Thank you.